PlusTen Box (#728F)

Dick Plambeck, 5/4/2007
revision A, 11/25/08, Dick Plambeck – new VCO, notes on 10 MHz input level

Function: Provides the LLref signal (LOref + 10 MHz) used as a local oscillator by the linelength receivers. A PlusTen board is located in each of the LOref distribution boxes.

Brief circuit description: LL ref is generated by a low noise voltage controlled oscillator (Z-Comm CLV1150E; some replaced by Z-Comm CLV1080A). A sample of the oscillator output is mixed with LOref in mixer U19 (ADE-30), producing a 10 MHz phaselock I.F. This is amplified by U8 (AD603), a variable gain amplifier which attempts to maintain an output level of +10 dBm. The AGC voltage can be accessed at R55; full gain is about 0.45 V, full atten is –0.45 V. I & Q modulator U6 is used as a phase detector. The sideband can be selected by crossing the wires at jumper J3. Variable inductor L17 tunes a 20 MHz trap before the integrator U18 (OP27), and variable inductor L4 may be used to minimize 10 MHz sidebands on output signal. Transistor Q8 switches off the sweep when the signal is locked on the correct sideband; Q6 switches off the IF momentarily if locked on wrong sideband. Directional coupler U13 is omitted – in the past this was used to send a sample of the LLref signal to a second board which applied Walsh function phase modulation to the LLref signal; this was relevant in the previous scheme where the echo signal was generated individually on each antenna.

In Nov 2008 we replaced the Z-Comm VCO's in boxes 3 and 4 with lower freq models (Z-Comm CLV1080A); these phaselock over the range 960 MHz to > 1280 MHz, thus allowing the SZA to operate at an LOref freq of 998 MHz.

Problems. Occassionally at CARMA the LLref locks at (LOref – 30 MHz) instead of (LOref + 10 MHz). Doug Thornton suggests that level out of the AGC is a little high relative to the lock threshold, suggests that we increase the value of R48 (currently 1 K), or change AGC target value by adjusting R54,which sets current through detector diode D2. Another possibility is that 10 MHz level is too high. Probing pin 1 (the LO) into mixer U6, I find that 3rd harmonic is just 30 dB down with input level of +7 dBm, but about 50 dB down with input level of -1 dBm; box locks down to an input level of -17 dBm. Possibly reducing 10 MHz input level to ~0 dBm will fix the problem.

SMA inputs:

- LOref: nominally 1100-1260 MHz, but the PlusTen circuit works from approximately 1050 to 1450 MHz; an input level of –10 dBm puts the AGC control voltage (testpoint on R55) at about 0 V. New VCO works from 960 MHz to at least 1280 MHz.
- 10MHz: ~ 0 dBm

SMA output:

- LLref: ~ +10 dBm

9-pin D submin connector, male

1	-15 V supply
2	phaselock T/F
3	PWR GND
4	phaselock LED+ (LED mounted on front panel of LOref dist box)
5	+15 V supply
6	NC
7	phaselock T/F gnd
8	NC
9	phaselock LED -

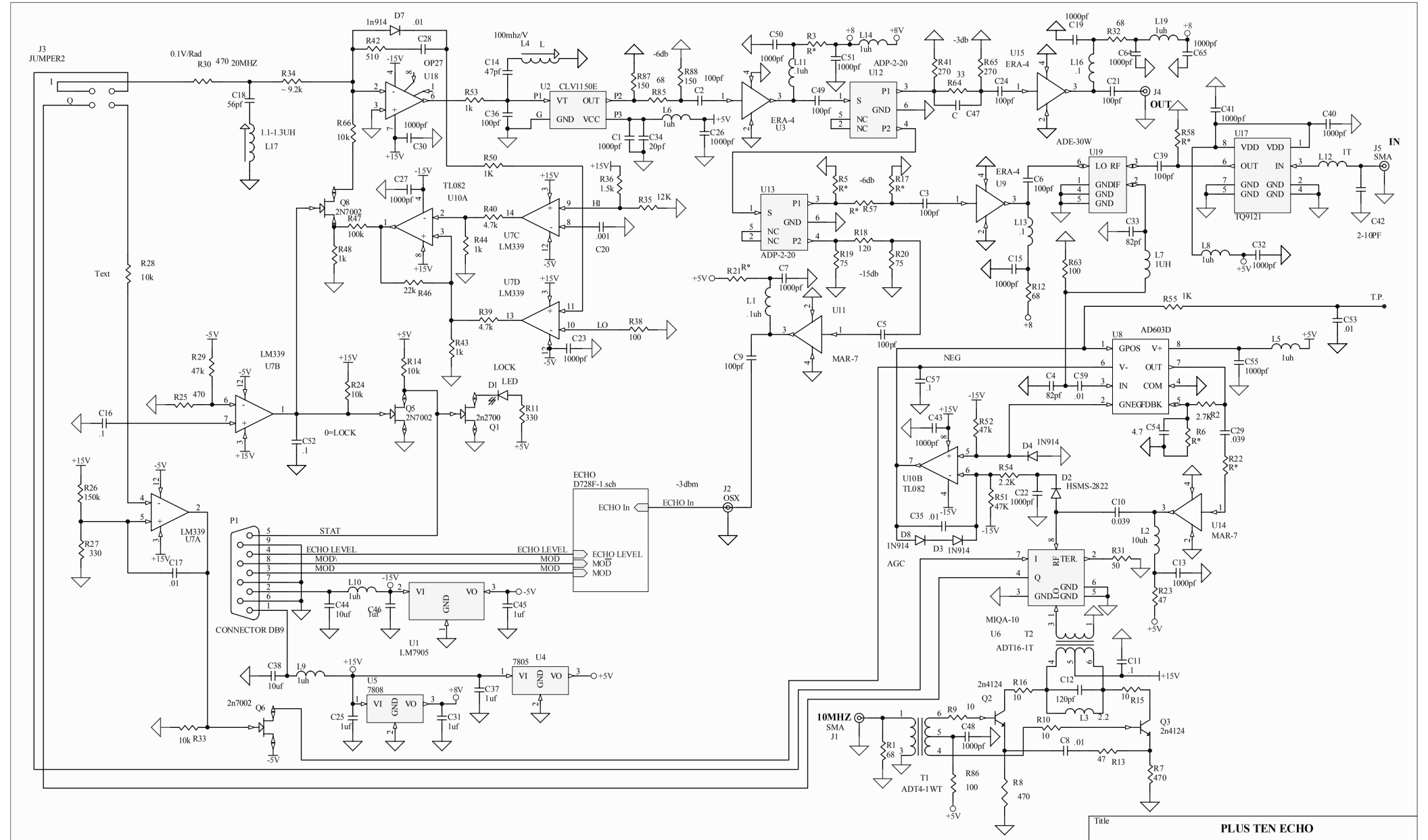

Title	PLUS TEN ECHO	
Size: B	Number: D728F	Revision:
Date: 5/4/2007	Sheet of 1 OF 2	
File: F:\client\Doug\Sch\D728f.sch	Drawn By:	