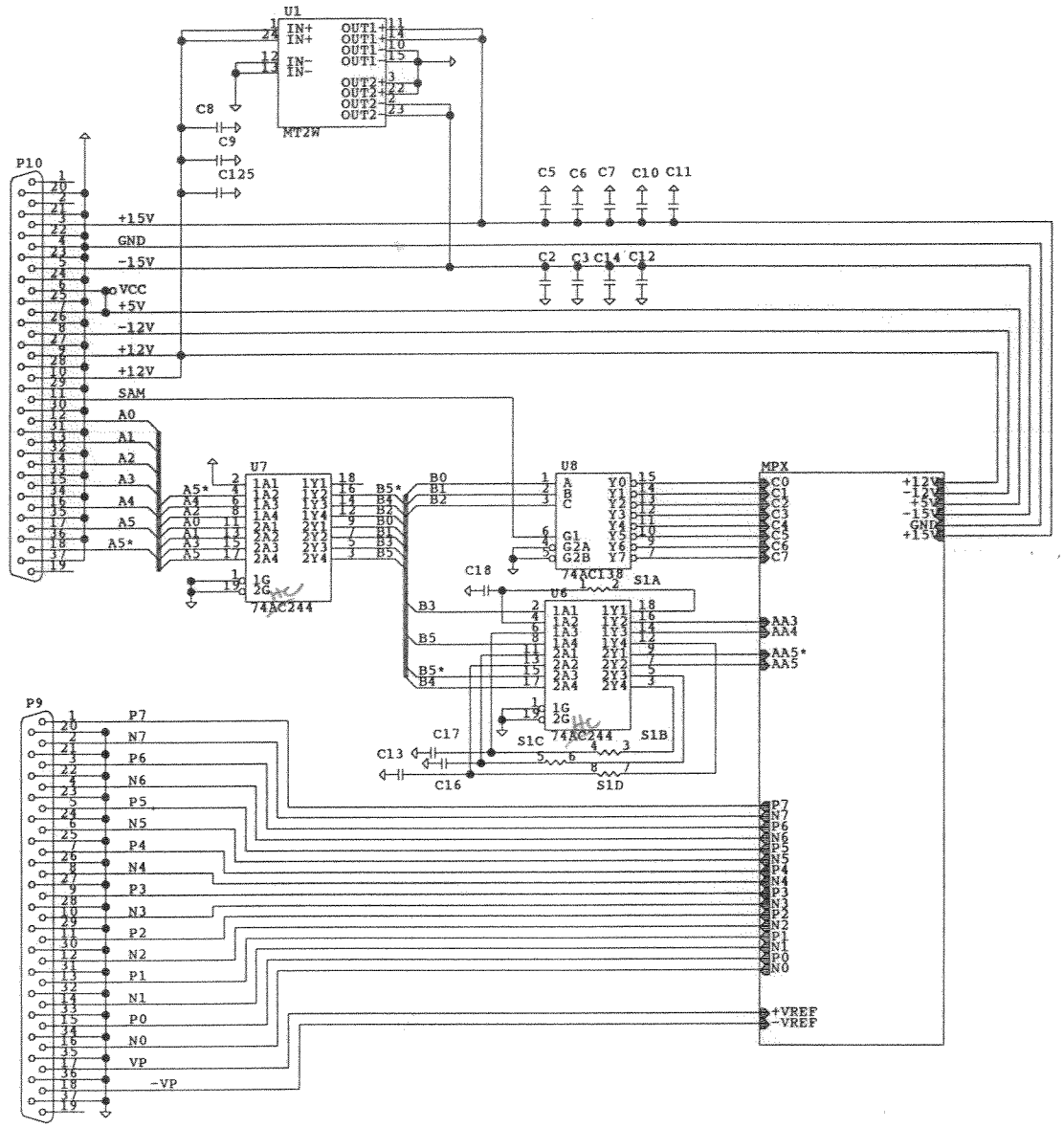

UNIVERSITY OF CALIFORNIA		
Title	ANALOG MULTIPLEX III	
Size A	Document Number D762	REV
Date: January 6, 1993	Sheet 1 of 7	

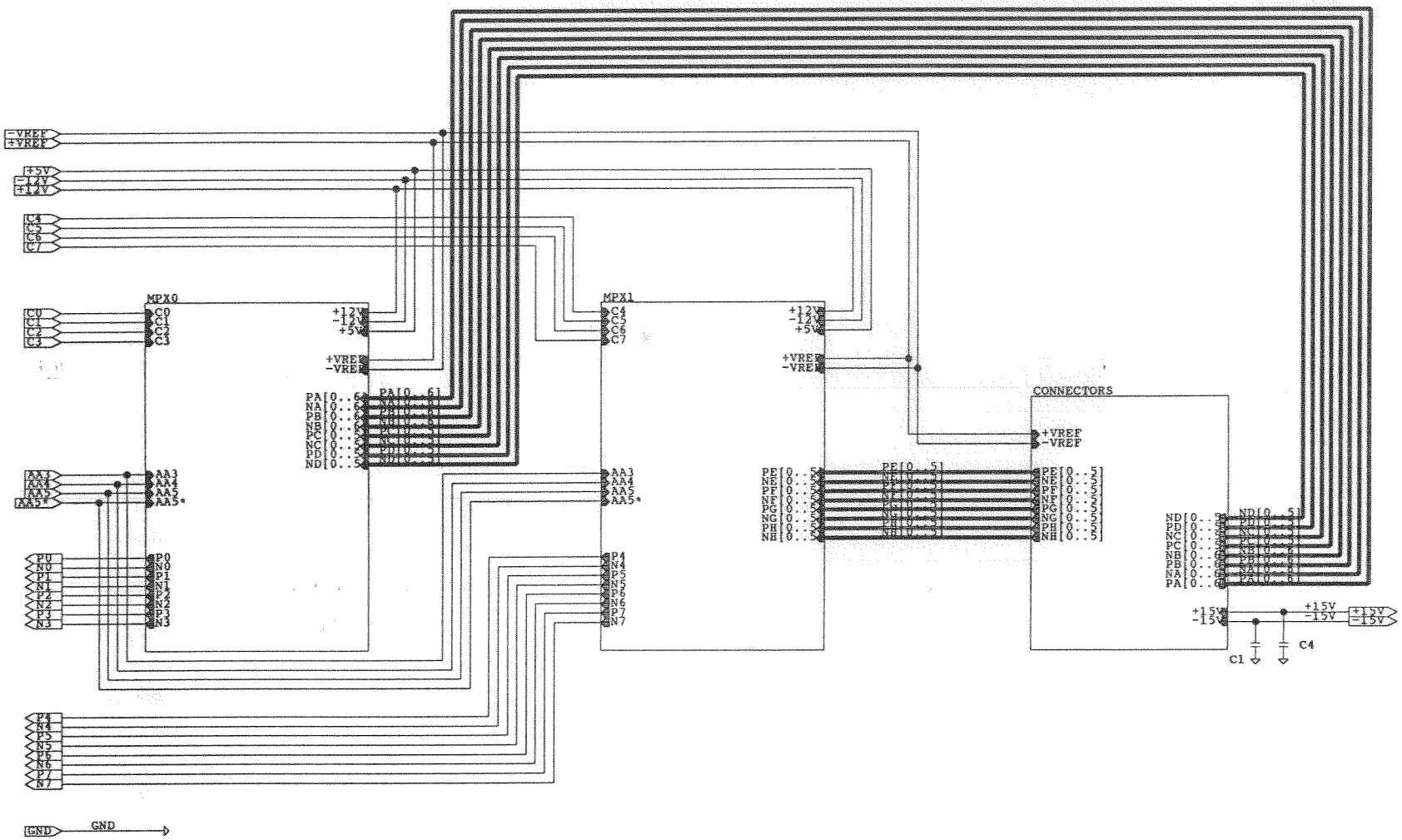

UNIVERSITY OF CALIFORNIA		
Title	ANALOG MULTIPLEX MPX III	
Size A	Document Number D762-1	REV
Date: January 6, 1991	Sheet 2 of 7	

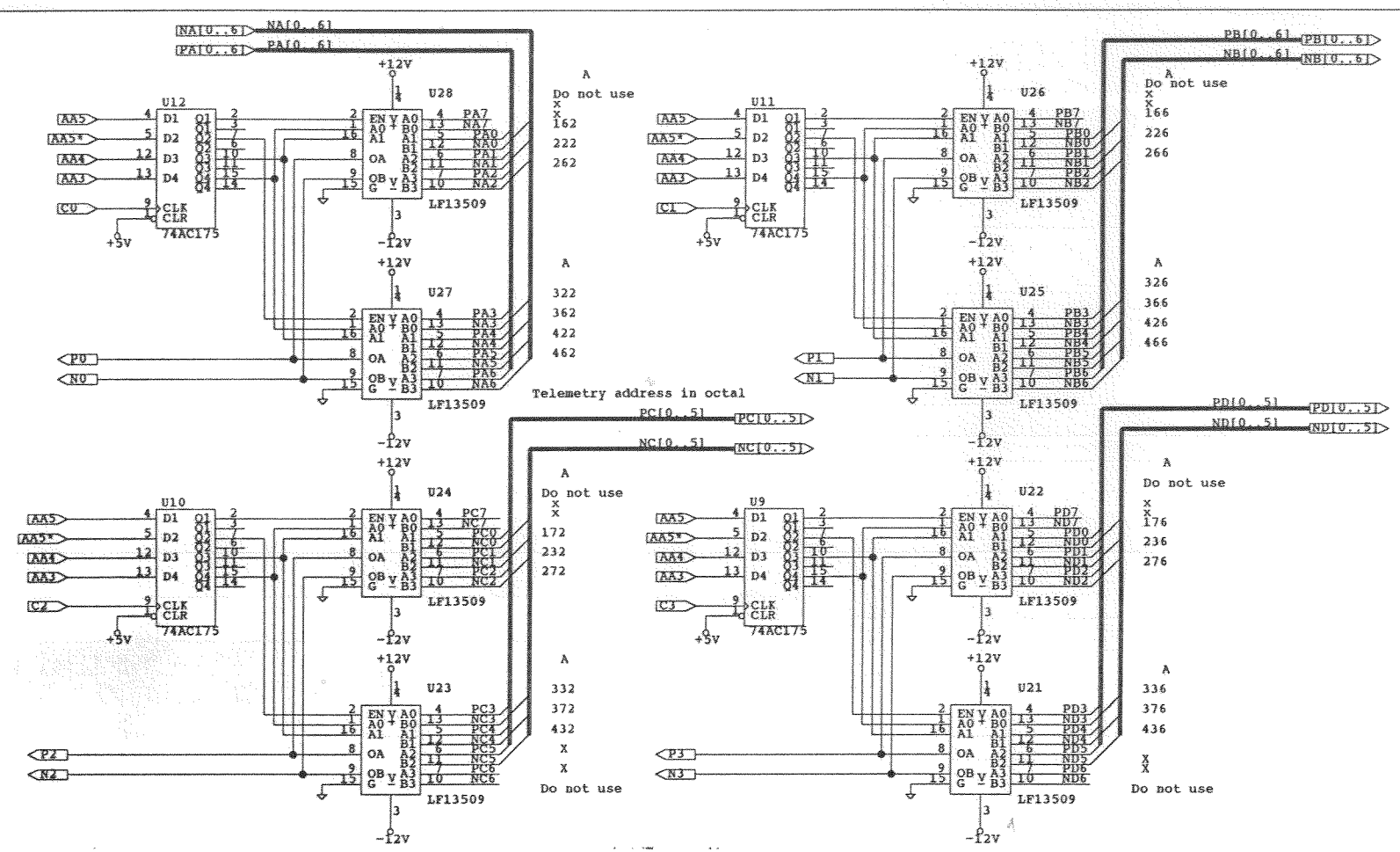

LF13509 may be replaced by the more rugged MAX359

Numbering represents the sequence that the voltage will appear in the telemetry in octal

UNIVERSITY OF CALIFORNIA		
Title: ANALOG MULTIPLEX MPX0		
Size: A	Document Number: D762-2	REV
Date: January 6, 1993	Sheet 3 of 7	

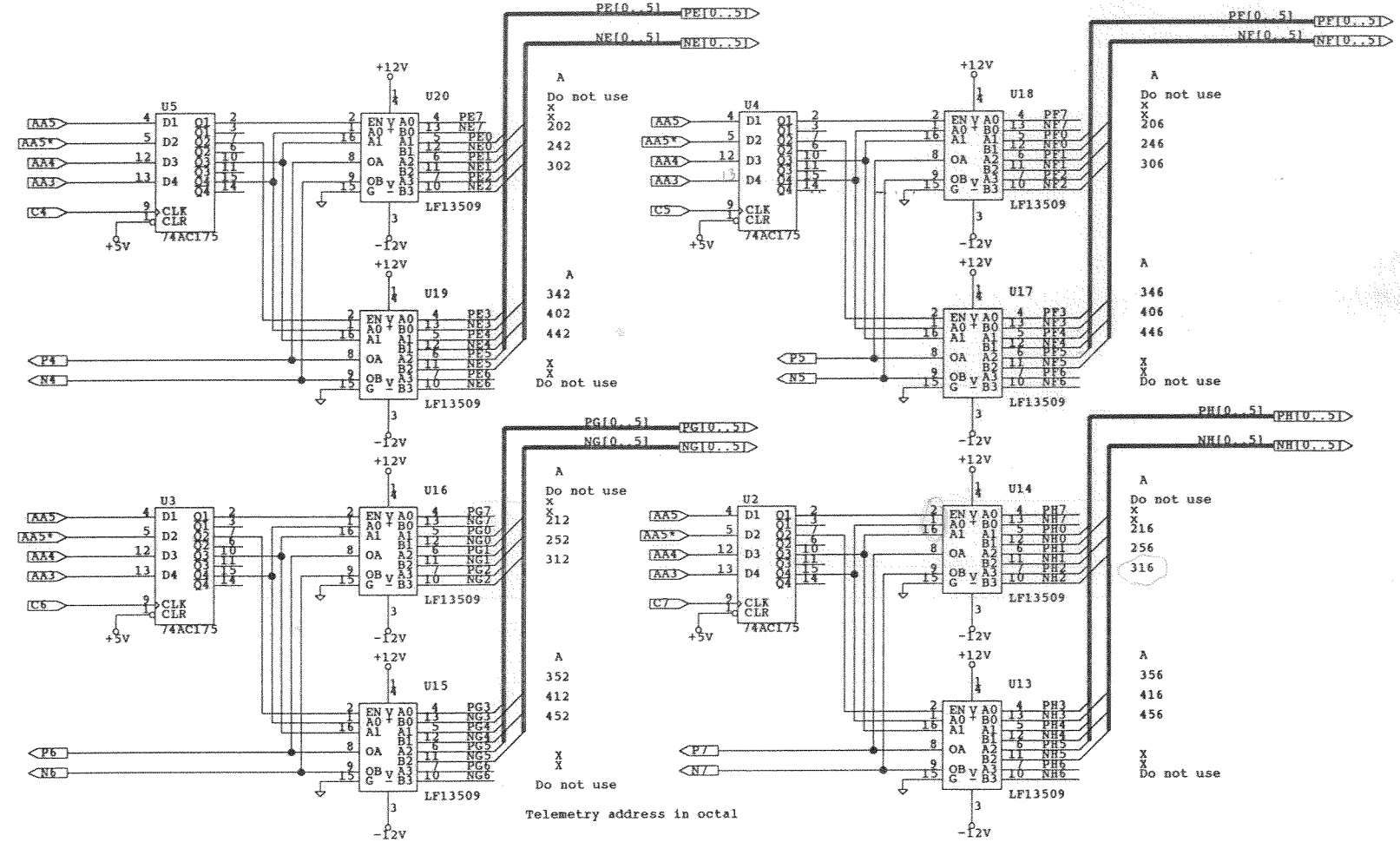

U17, U19 need pin 15 tied to GND

UNIVERSITY OF CALIFORNIA		
Title	ANALOG MULTIPLEX MPX1	
Size A	Document Number D762-3	REV
Date: January 6, 1993	Sheet 4 of 7	

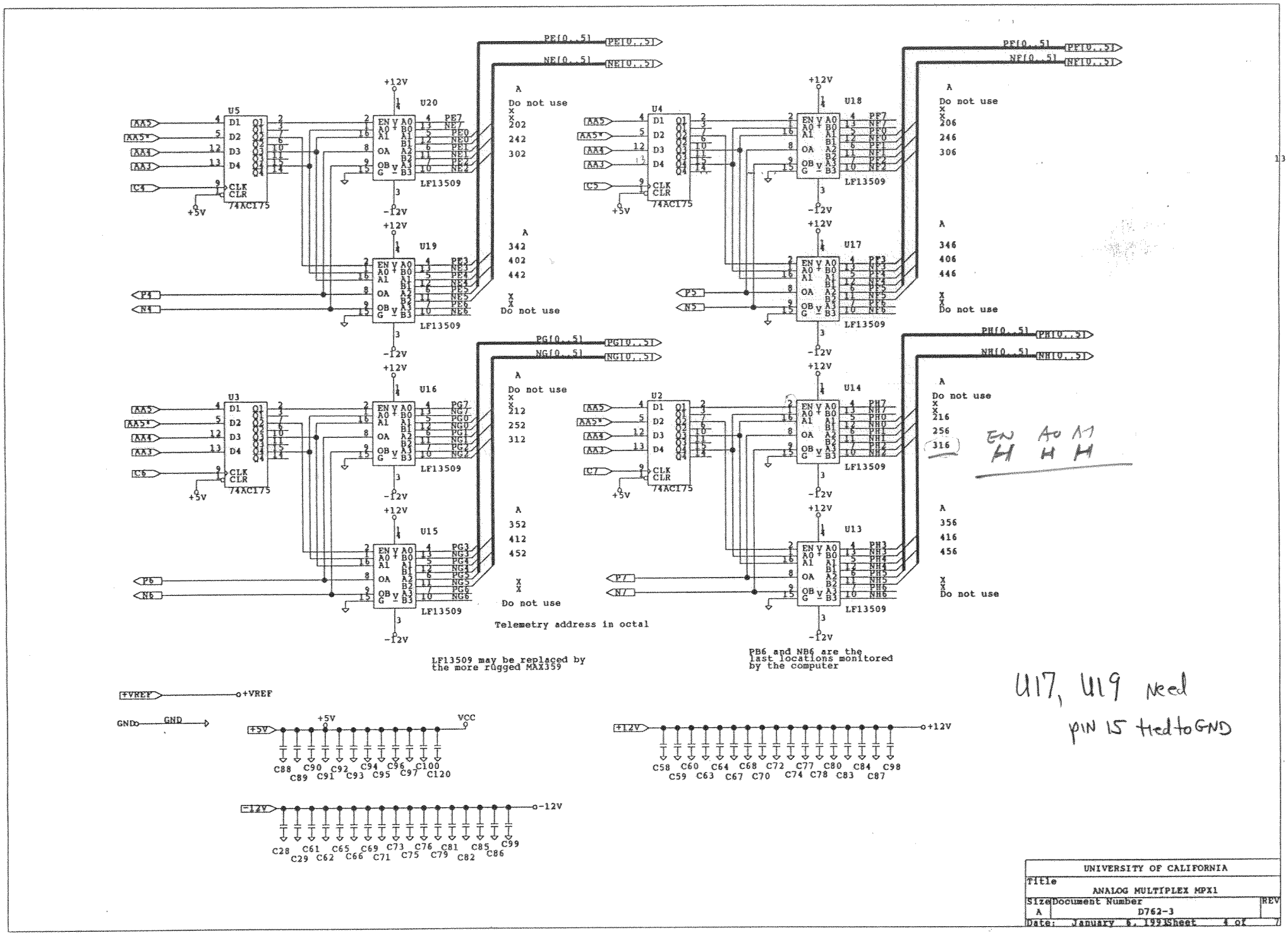
U5
74AC175
U20
U19
LF13509
PE[0..5]
NE[0..5]
A
Do not use
202
242
302
342
402
442
U4
74AC175
U18
U17
PF[0..5]
NF[0..5]
206
246
306
346
406
446
U3
74AC175
U16
U15
PG[0..5]
NG[0..5]
212
252
312
352
412
452
U2
74AC175
U14
U13
PH[0..5]
NH[0..5]
216
256
316
356
416
456
EN A0 A1
H H H
Telemetry address in octal
LF13509 may be replaced by the more rugged MAX359
PB6 and NB6 are the last locations monitored by the computer
U17, U19 need pin 15 tied to GND
+VREF
GND
+5V
VCC
C88 C90 C92 C94 C96 C100
C89 C91 C93 C95 C97 C120
+12V
C58 C60 C64 C68 C72 C77 C80 C84 C98
C59 C63 C67 C70 C74 C78 C83 C87
-12V
C28 C61 C65 C69 C73 C76 C81 C85 C99
C29 C62 C66 C71 C75 C79 C82 C86
UNIVERSITY OF CALIFORNIA
Title
ANALOG MULTIPLEX MPX1
Size A
Document Number D762-3
REV
Date: January 6, 1993
Sheet 4 of 7

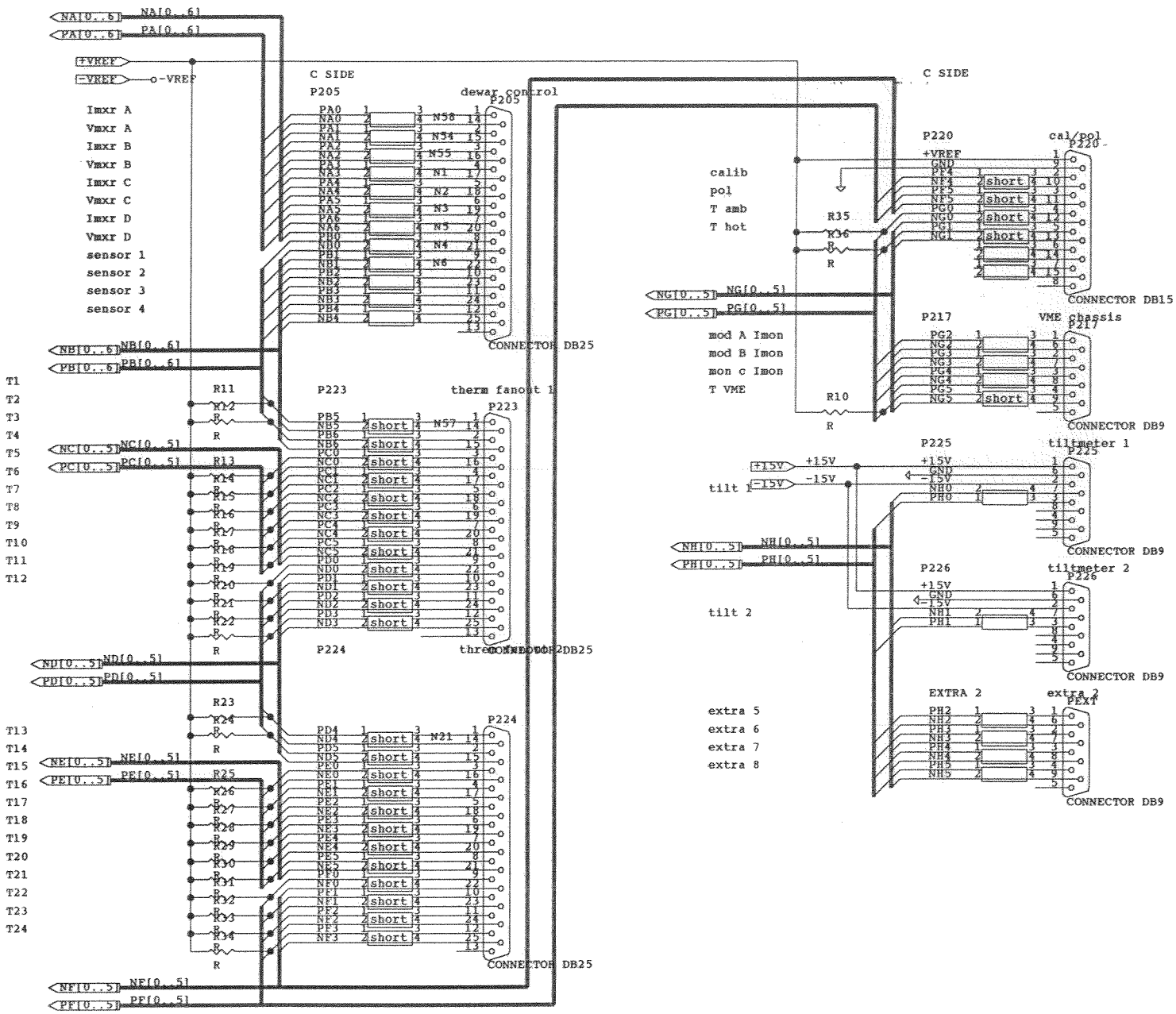

UNIVERSITY OF CALIFORNIA		
Title: ANALOG MULTIPLEX CONNECTORS C CARD		
Size: A	Document Number: D762-4	REV
Date: January 6, 1993	Sheet 5 of 7	

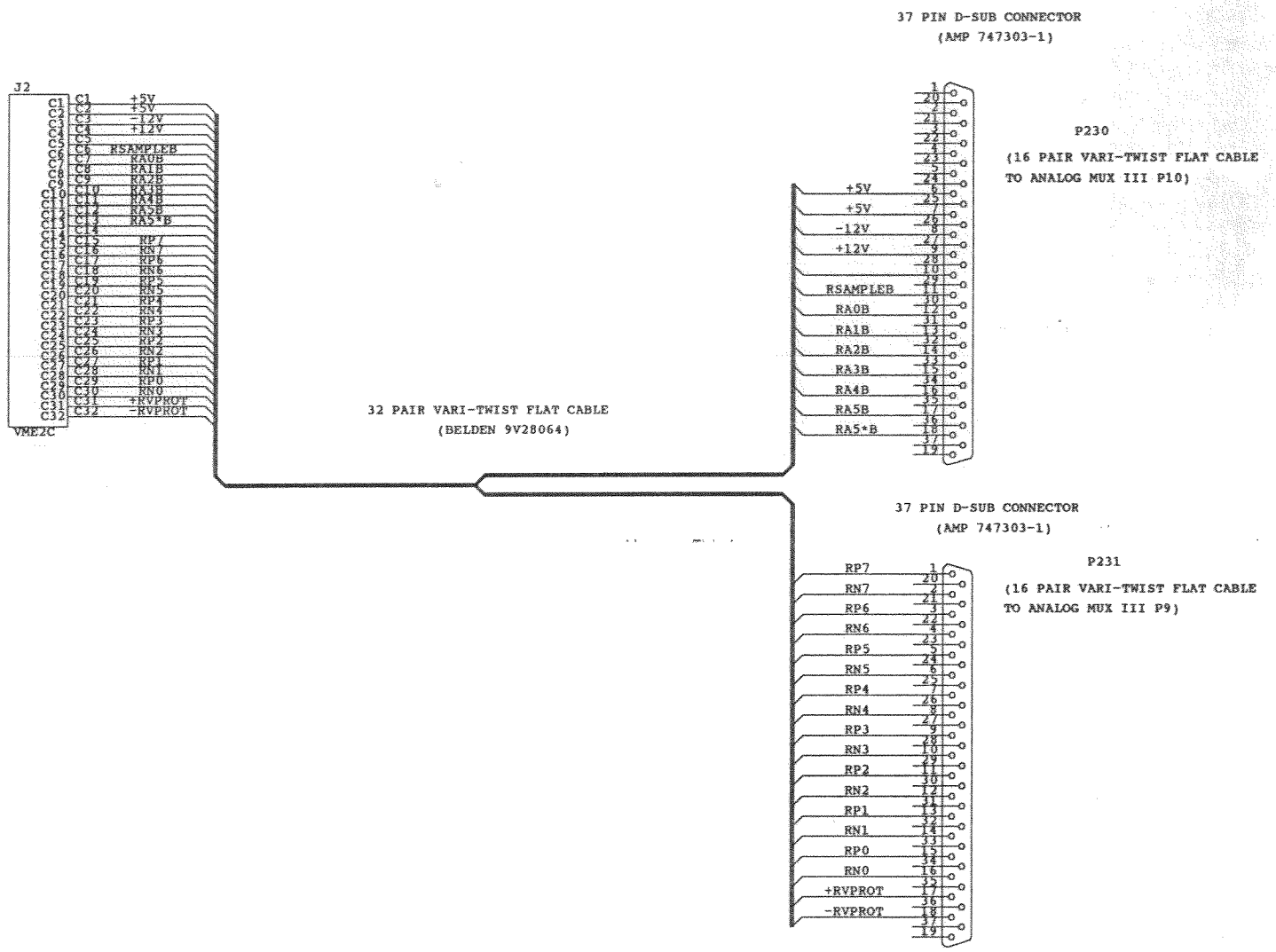

Title	ANALOG MUX WIRING DIAGRAM	
Size A	Document Number D762-5	REV
Date: January 6, 1991	Sheet 6 of 7	

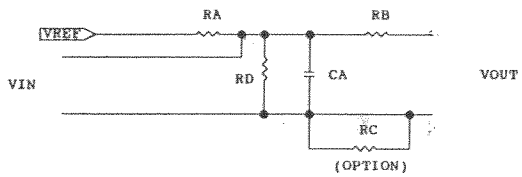

RESISTOR NETWORK LAYOUT
(TOP VIEW)

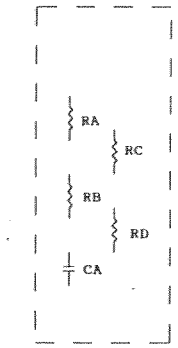

RESISTOR VALUE

FOR VREF OUT:	RA=0	RB=0	RD=N.C.	CA=N.C.	
FOR THERMISTOR:	RA=10K 0.1%	RB=0	RD=N.C.	CA=0.1UF	
FOR VOLTTAGE DIVIDER 0-4V:	RA=N.C.	RB=0	RD=N.C.	CA=0.1UF	
0-10V; 0-11V:	RA=N.C.	RB=8.06K 1%	RD=4.75K 1%	CA=0.1UF	USE 82.5K, 47.5K for VOP's for higher impedance
0-15V; 0--15V:	RA=N.C.	RB=12.1K 1%	RD=4.64K 1%	CA=0.1UF	
0-5V:	RA=N.C.	RB=1.5K 1%	RD=4.32K 1%	CA=0.1UF	

0-VRef RA-NC RB=0 RD=NC CA=0.1μF

Title	ANALOG MUX RESISTOR NETWORK	
Size A	Document Number D761-6	REV
Date: January 5, 1993	Sheet 7 of 7	